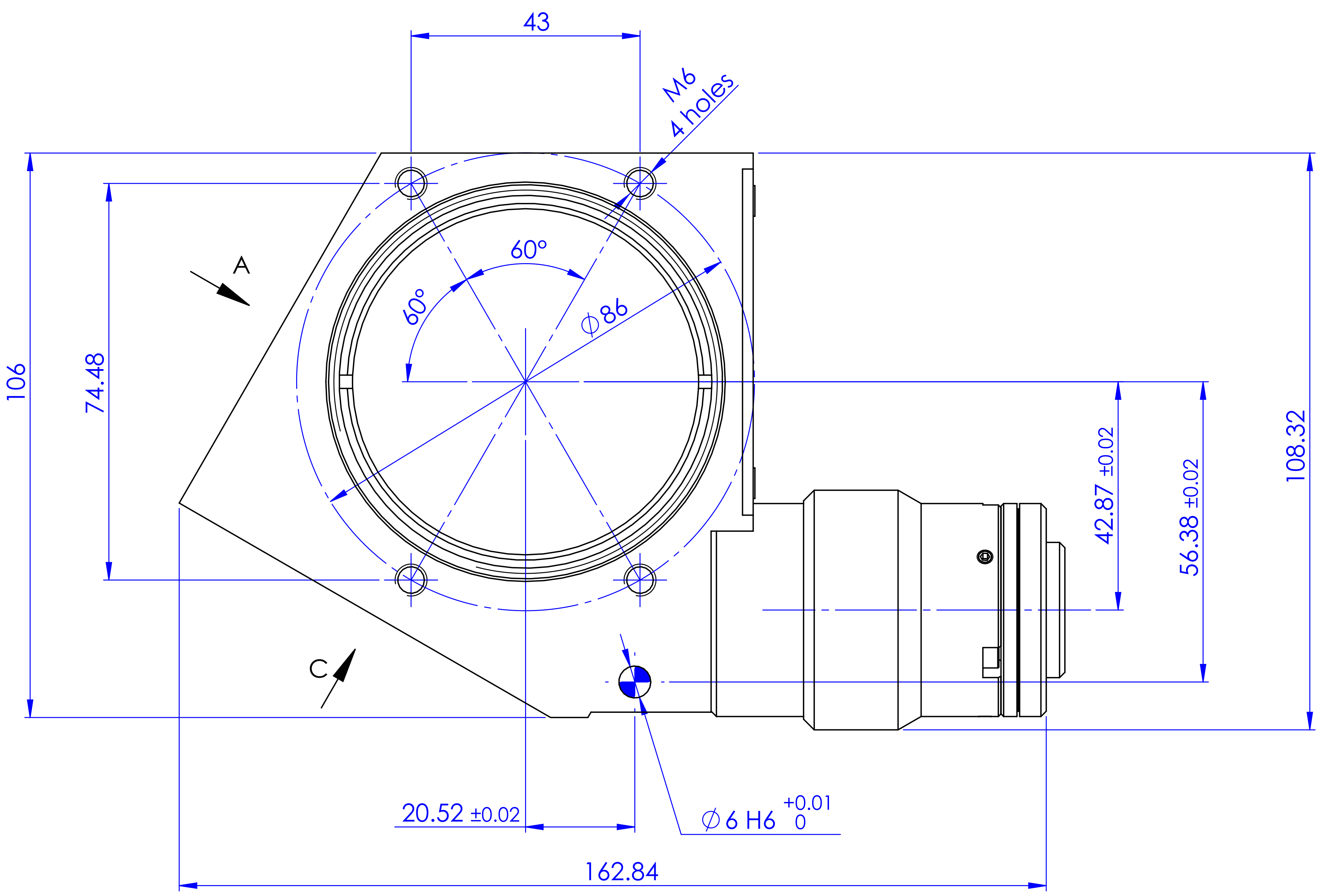

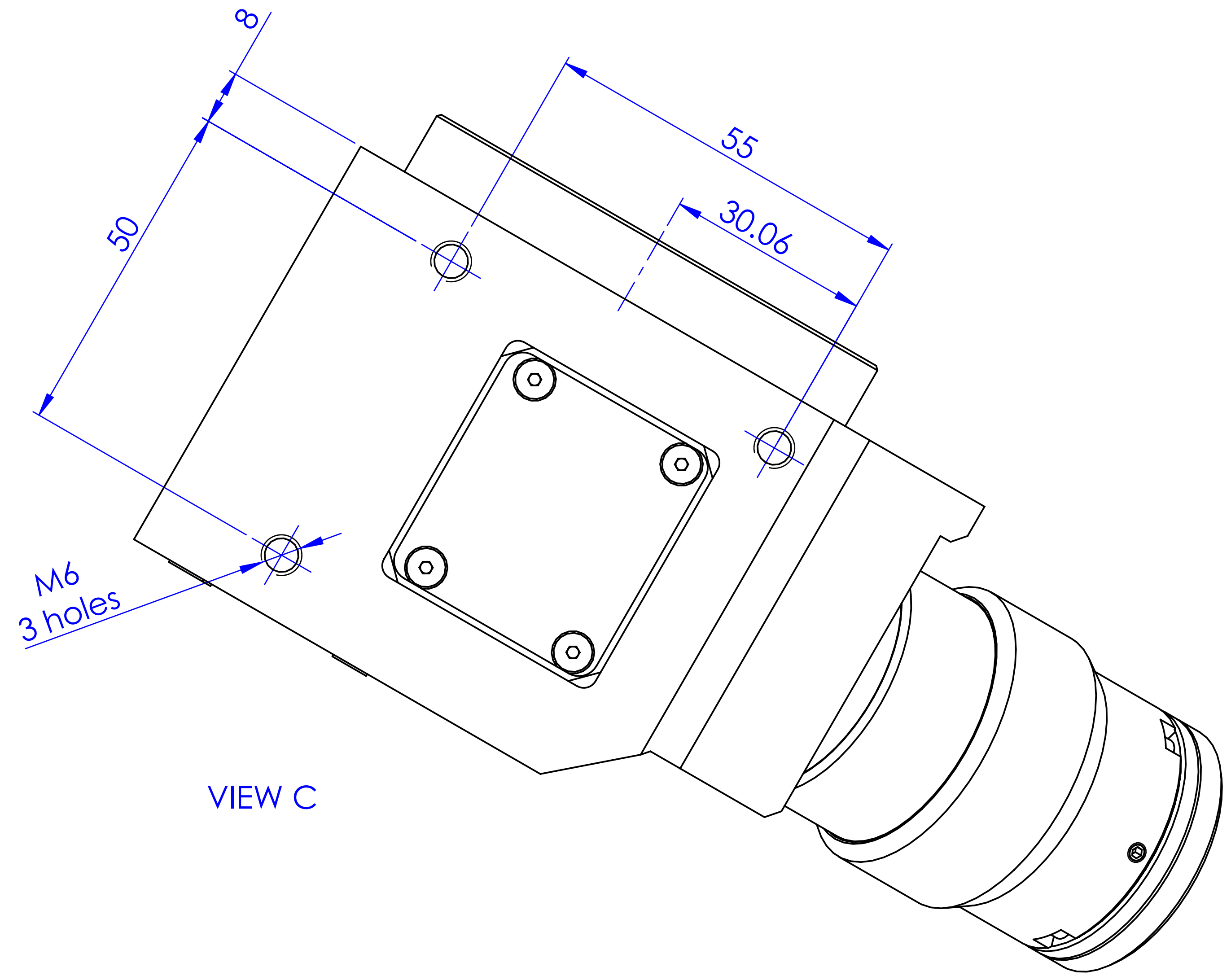

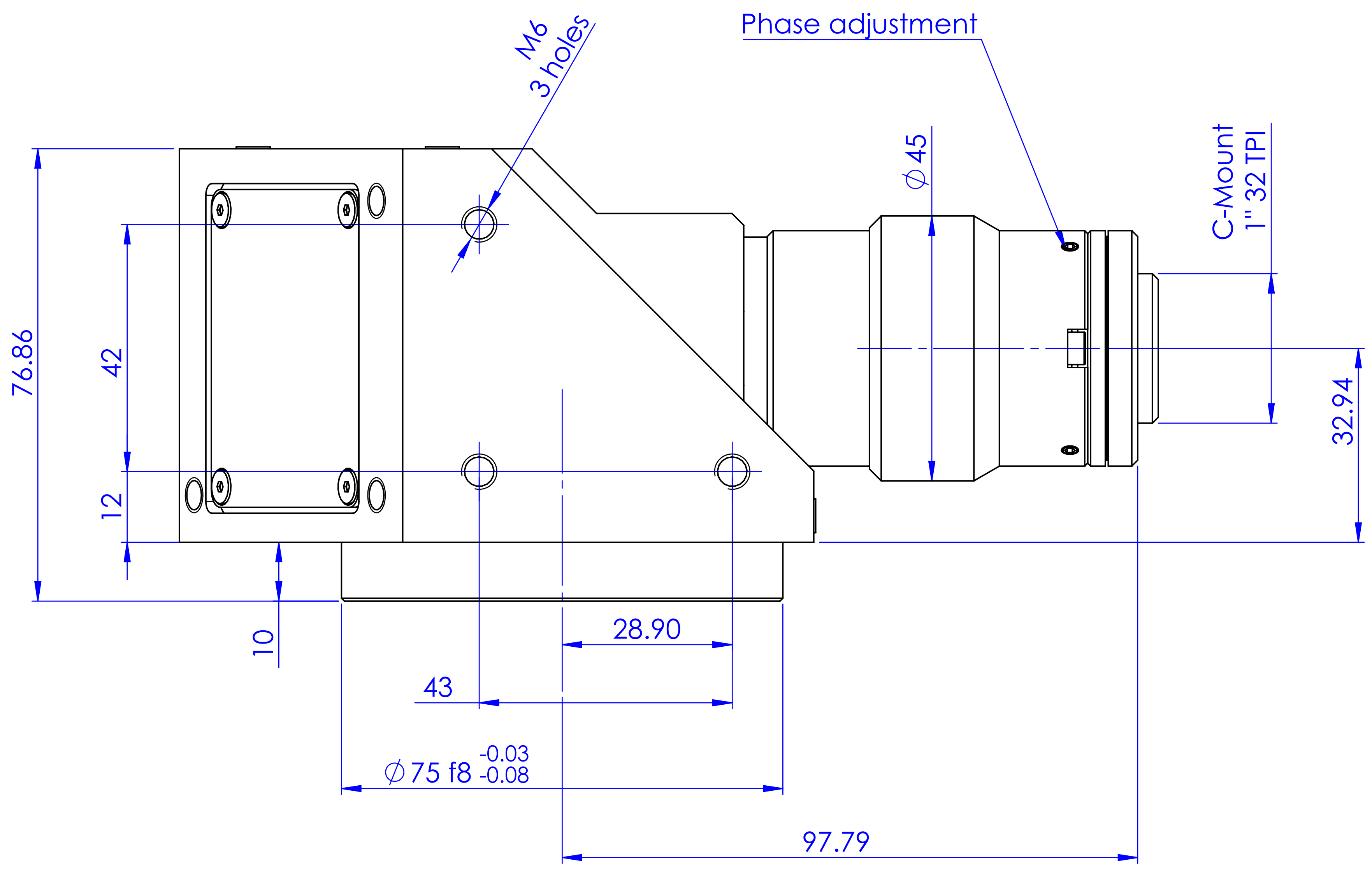

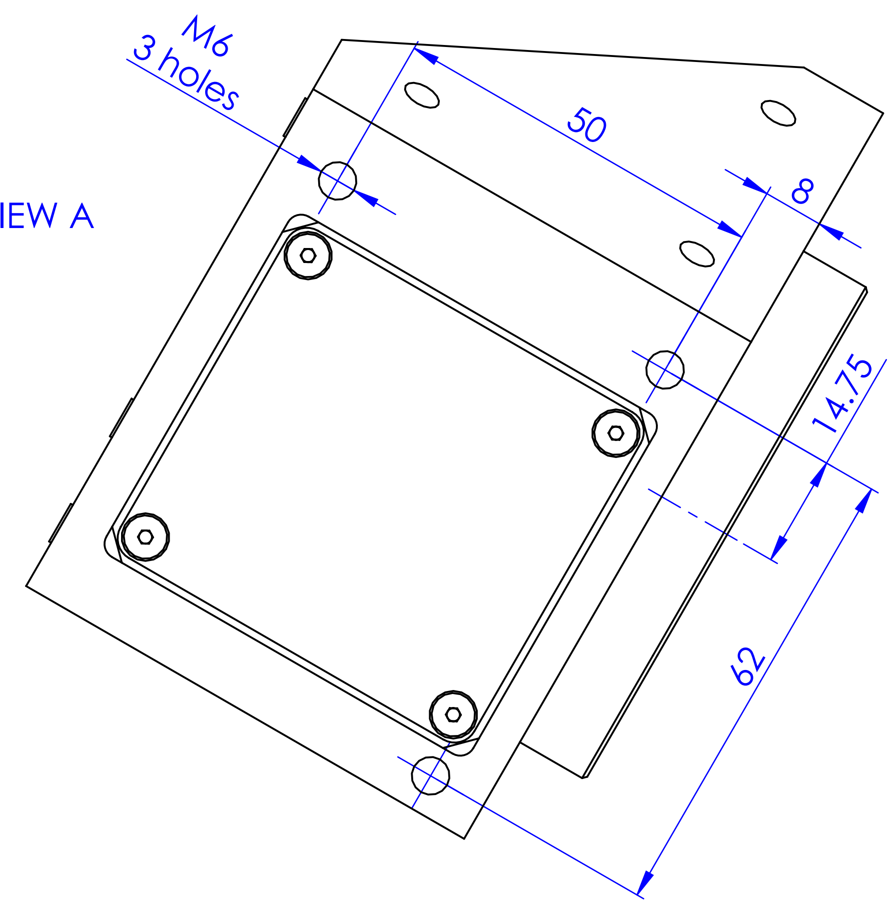

Material	N.A.									Mass 1236 g	Scale 1:1
Surface treatment	N.A.									Part No. CO23957	
Geometrical tolerance (ISO 2768-2)							Class	K	Undimensioned bevels	0.5x45°	Description TCCR2M048-C
Linear tolerance (ISO 2768-2)							Class	m			
0.5 ÷3	>3÷ 6	>6÷ 30	>30÷ 120	>120 ÷400	>400÷ 1000	>1000 ÷2000	>2000 ÷4000	Undimensioned radii	R 0.5		
±0.1	±0.1	±0.2	±0.3	±0.5	±0.8	±1.2	±2				
OPTO ENGINEERING								Date	Name	Drawing No. DP 23957-C	Sheet 1/1
						Designed		04/03/2015	Vasconetto		
						Drawn		16/07/2015	Rodella		
						Checked					

all dimensions are in mm

OPTO ENGINEERING S.r.l. - Mantova, Italy - Tel. +39 0376699111 - www.opto-e.com

Secret and confidential - All rights reserved - No copy, dissemination or circulation is allowed unless specifically authorized in writing by OPTO ENGINEERING S.r.l. - Any violation shall be legally prosecuted.